Progress toward a microsecond duration, repetitively pulsed, intense-ion beam for active spectroscopic measurements on ITER

H. A. Davis,[a] J. C. Olson,[b] W. A. Reass, Cris W. Barnes, and R. R. Bartsch
Mail Stop E526, Los Alamos National Laboratory, Los Alamos, New Mexico 87545

D. M. Coates, J. W. Hunt, and H. M. Schleinitz
DuPont Central Research and Development, Wilmington, Delaware 19880

R. H. Lovberg[c]
University of California, San Diego, California 92093

J. B. Greenly
Laboratory of Plasma Studies, Cornell University, Ithaca, New York 14853

(Presented on 13 May 1996)

We describe the design of an intense, pulsed, repetitive, neutral beam based on magnetically insulated diode technology for injection into ITER for spectroscopic measurements of thermalizing alpha particle and thermal helium density profiles, ion temperature, plasma rotation, and low Z impurity concentrations throughout the confinement region. The beam is being developed to enhance low signal-to-noise ratios expected with conventional steady-state ion beams because of severe beam attenuation and intense bremsstrahlung emission. A 5 GW (e.g., 100 keV, 50 kA) 1 μs duration beam would increase the charge exchange recombination signal by 10^3 compared to a conventional 5 MW beam. © *1997 American Institute of Physics.* [S0034-6748(97)52301-X]

I. INTRODUCTION

Charge-exchange recombination spectroscopy[1,2] (CXRS) is now the primary diagnostic of ion temperature, rotational velocity, and helium ash concentration[3] in tokamaks. Using visible spectroscopic views across a neutral beam which provides the charge exchange source for fully stripped ions in the plasma, CXRS provides good spatial localization of the Doppler shifted and broadened light. Present tokamaks are able to use the same neutral beams used for heating the bulk plasma for the CXRS source. The 100–120 keV energy of these positive-ion-source neutral beams is well matched to the peak of the charge exchange cross section. Future large, high-density tokamaks such as ITER are faced with a serious problem. Positive-ion-source neutral beams will not penetrate the plasma and are not suitable for core heating. High-energy negative-ion-source beams planned for heating interact at too high an energy with the plasma ions and too low of a cross section to produce useful CXRS signals.[4] Steady-state beams provide a CXRS signal which increases linearly with plasma density, while the bremsstrahlung background increases quadratically. In high-density operation of ITER, it is expected that only in the outer half of the plasma can CXRS signals be seen by modulating the beam and phase averaging over a few seconds.[5,6] Thus, ion temperature and helium ash density in the central core of the plasma would be unmeasurable.

It has been proposed that intense ion diode technology could be adapted to make a diagnostic neutral beam source.[7] Instead of steady (or slowly modulated) beams with less than 1 A/cm^2 beam density, microsecond pulses of a few kA/cm^2 (at the beam focus in the reactor) would be used. Operated at 100 keV/AMU near the peak of the CXRS cross sections, these beams would increase signal-to-noise ratios because of their high intensity coupled with very short gating times on the detectors to reduce the bremsstrahlung background. Not only would these beams provide vital measurements in the plasma core, but would do so with time resolution governed by the repetition rate of the beam. Such a neutral beam was developed,[8] and it was demonstrated that effective charge neutralization could be achieved in a gas cell at current densities of 20 A/cm^2 (only a factor of 3–7 below the required value depending on the diode diameter), answering the primary scientific question of the approach.

Many of the remaining key issues in the application of intense ion-diode technology to diagnostic neutral beams have largely been solved, albeit not simultaneously: pulse lengths of longer than 1 μs have been achieved with careful attention to magnetic geometry; more than 90% of the ion diode beam can be at full energy; and active plasma anodes (see discussion below about plasma anodes) have achieved more than 90% hydrogen for cleanliness.[9] Beam divergences less than 0.8° (FWHM) have been demonstrated.[10] This is within a factor of two of the divergence needed to maintain the desired current densities in ITER over the required 15 m source-plasma distance required if the beam source is to be located outside the biological radiation shielding wall with adequate room for valves and the neutralizing cell. The light-ion inertial confinement fusion program regularly proposes such divergences to make intense ion beam implosion schemes plausible, but some development may be required. The remaining technical issue, demonstrating repetitive beam operation, is discussed in the remainder of the article.

Over the past two decades researchers in United States, Germany, Russia, and Japan, have been investigating the application of intense-pulsed-ion beam technology ($E=1$–30

[a]Electronic mail: davis@lanl.gov
[b]Current address: Varian Ion Implant Systems, 508 Dory Rd., Gloucester, MA 01930-2297.
[c]Emeritus.

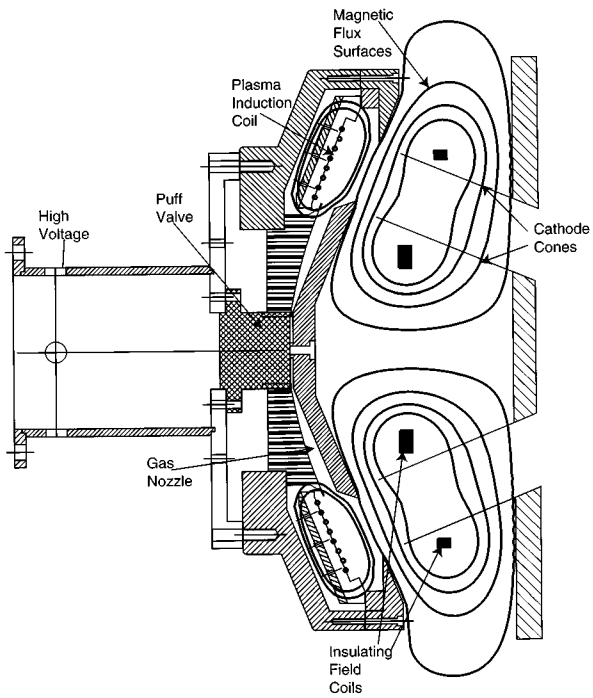

FIG. 1. Active-plasma anode diode layout.

MeV, $I=0.1$–1 MA, $\tau=10$–50 ns)[11,12] to inertial confinement fusion defense and energy programs. More recently (over the past decade), using more modest beam parameters ($E=0.1$–1.0 MeV, $I=0.005$–0.05 MA, $\tau=100$–1000 ns), research into the processing of materials using this technology has emerged.[13–15] Other applications such as high-flux neutron sources and neutral beam sources for tokamak diagnostics, the subject of this article, also appear promising.

These beams are produced in vacuum magnetically insulated diodes which require a source of ions, an accelerating voltage, and a magnetic field transverse to the acceleration gap to suppress electron flow and enhance the ion flow (Fig. 1). Ion currents typically exceed the vacuum space-charge limit by 5–50 times owing to electrons confined in the acceleration region by the applied magnetic field. The beams are produced and transported in vacuum of less than 10^{-4} Torr. Traditionally ions are drawn from the surface of a polymer anode[16] converted to a plasma by a combination of high-voltage flashover and electron impact. Polymer anodes are unacceptable for applications requiring repetitive operation because of limited lifetime, excessive heat loading, and high gas production. Also polymer anodes produce excessive debris, have poor uniformity and reproducibility, and do not allow the selection of the ion species (typically these beams have a mix of hydrogen and carbon ions). Anodes, which draw ions from a preformed plasma are being developed at a number of laboratories to overcome the above limitations.[9,17,18] Some of these anodes allow the selection of any gaseous ion species including hydrogen isotopes and helium. Traditional single-shot beam accelerators (using Marx generators and high-voltage pulse lines), incompatible with repetitive operation, are yielding to new high-average power beam accelerators. An ion beam system operating at 100 Hz (in 10-shot burst mode, since no active cooling was available)[9] and a 300 keV intense beam source at 0.3 Hz[19] have been demonstrated.

II. DIODE DESIGN

The first diode used on the Los Alamos Continuous High Average-power Microsecond Pulser (CHAMP) accelerator will be for a variety of applications. It will use a magnetically insulated extraction diode[20,21] with plasma anode in ballistically focused geometry (45° full focusing angle with 30 cm focal length). Extension to a straight unfocused beam or longer focal length beams for tokamak diagnostics is straightforward requiring only different anode and cathode angles with respect to the system axis. The diode shown in Fig. 1 operates as follows. The anode consists of a flat pulsed induction coil[22] in an aluminum housing. The high-voltage coil is formed from four parallel sets of two turn spiral windings coaxial with the system axis. The coil in focusing geometry is dished in the form of a cone having a normal to the surface of 22.5° with respect to the system axis. The plasma anode is formed by first radially ducting a puff of gas with a fast acting valve (rise time ~100 μs), located on axis, over the coil surface. The valve will be actuated by a metallic diaphragm driven either by eddy currents or a voice-coil mechanism. When the gas puff is properly distributed, a fast rising current pulse (10–20 kA, $\tau_{\rm rise}=1$–2 μs) delivered to the induction coil breaks the gas down and induces azimuthal current in the plasma at the coil surface. The $j_\theta \times B_r$ force on the plasma accelerates the plasma to the radial opening in the aluminum anode housing where it is stagnated against the applied radial magnetic field. Ions are accelerated from this location. Higher frequency oscillations at 8 MHz will be induced in the windings to promote rapid and complete ionization of the gas. The cathode consists of the tips of two thin concentric metal conical sections (or cylinders for unfocused geometry). The gap between the cathode tips and the plasma anode is 2 cm. Before application of the induction coil and accelerating voltages, a 200 μs rise time magnetic field of about 1.5 kG is applied transverse to the anode–cathode gap by two magnetic field coils—one located inside the inner cone and one located outside the outer cone. At peak field and when the plasma is in position at the anode housing aperture, a positive accelerating voltage supplied from a high-voltage modulator is applied to the anode. The applied magnetic field strength is adjusted to prevent electrons from crossing the anode–cathode gap, but the more massive ions, only very weakly deflected by the magnetic field, have approximately linear trajectories. The insulating magnetic field will be set equal to about 2 $B_{\rm crit}$ where $B_{\rm crit}$ is the minimum field for insulation of the electrons given by the condition that the electron gyroradius at full electron energy equals the anode–cathode gap. The expected beam parameters are $E=200$–250 keV, $I=15$ kA, and $\tau=1$ μs or about 3.4 GW. This power nearly equals the 5 GW needed in the proposed diagnostic system for ITER.

We have modeled the dynamics of the plasma layer in planar geometry using a snowplow-type model which assumes the plasma is entrained by a thin, conducting current sheet driven away from the coil surface by currents in the inductive coil. The model solves the coupled circuit equation

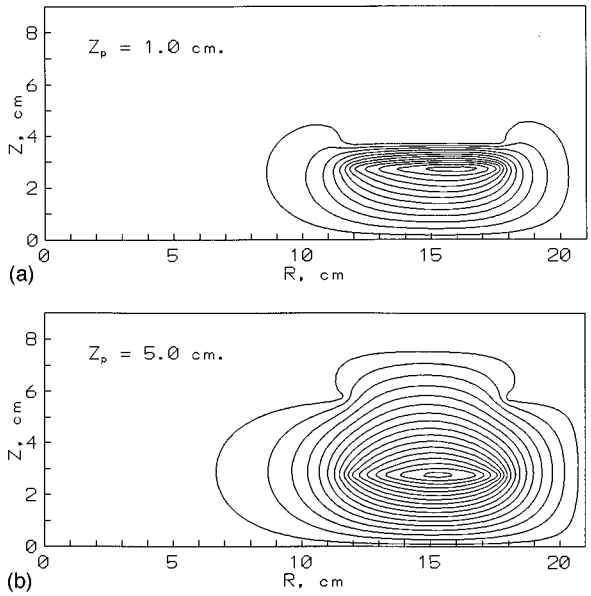

FIG. 2. Magnetic flux surfaces for the inductive coil with the plasma current sheet located at two distances from the coil surface: 1.0 cm (top) and 5.0 cm (bottom). The plasma position at the time the acceleration pulse is applied should be 3.0 cm from the coil surface.

and the equation of motion of the plasma with a model for the plasma resistivity derived from previous experimental data.[23] The circuit inductance as a function of current sheet position from the coil surface required for these calculations is determined from calculations of the magnetic field for various current sheet positions (Fig. 2) to be given by the expression:

$$L(z)=993(1-e^{-z/1.35})\ \text{nH},$$

where z=the current sheet position above the coil surface in cm. The procedure used was to vary the capacitor charge voltage so that the plasma is brought to rest against the applied magnetic field at the diode gap entrance. For a gas fill of 2.5×10^{15} molecules/cm^3 corresponding to 80 mTorr of D_2 at the coil surface before acceleration, a capacitor charge voltage of 14 kV is required. The density was chosen to insure good gas breakdown. The stored electrical energy is

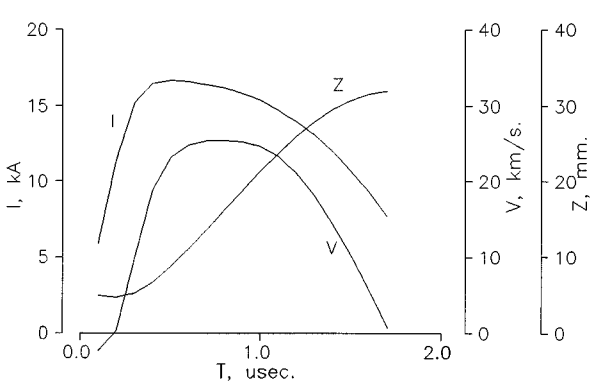

FIG. 3. Position (z) and velocity (v) vs time of the plasma layer for a D_2 fill density of 2.5×10^{15} cm^{-3} and capacitor charge voltage of 14 kV. The circuit current time history I is also shown.

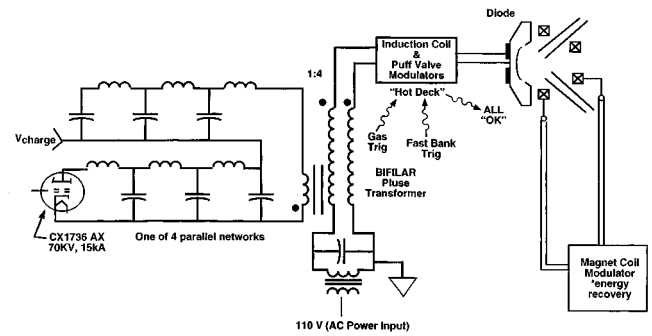

FIG. 4. Block diagram of the electrical circuits.

50 J. It takes 1.5 μs for the plasma to be driven into position at the anode housing aperture with a peak current sheet velocity of just over 20 km/s (Fig. 3).

Finite element thermal modeling of the coil has been performed. It was found that without a supplemental means to transfer heat dissipated in the coil, at 30 Hz unacceptably high temperatures on the order of 600 °C develop in the coil. Three solutions to this problem were investigated: (1) increase the thermal conductivity of the epoxy insulator by filling it with high-thermal-conductivity material such as diamond dust; (2) transfer the heat from the windings to the aluminum coil housing with heat pipes; and (3) remove the heat by flowing a cooling medium such as air, water, or oil through hollow windings. The model results indicated that all three methods would reduce the maximum temperature of the coil, but that the flowing coolant was the most effective.

III. ELECTRICAL DESIGN

A key system parameter, the pulse duration, was chosen from a study of overall system electrical efficiency including plasma formation and magnetic-field energy requirements, scaling of diode performance from the Los Alamos Anaconda accelerator operated with 1 μs pulses, tokamak diagnostic signal-to-noise optimization, thermal transport modeling of beam energy deposition in targets (for materials applications), and electrical engineering considerations. The beam electrical system requires many modulator subsystems synchronized with each other and the ion acceleration pulse (Fig. 4). A gas puff modulator and the induction coil modulator subsystem will be housed in a "hot deck" chassis at common potential with the pulsed anode. For electrical isolation, fiber optic cables will carry fast control and diagnostic signals. Solid-state switches will be used to deliver current from storage capacitors to the magnetic field coils at ground potential. Energy recovery techniques will be used in the final design, although in initial tests energy recovery will be omitted for simplicity. A dedicated fast sequence and monitor system will confirm the proper subsystem parameters before the main acceleration pulse is initiated to minimize damage to components in the case of off-normal operation.

The accelerating power system will utilize four parallel-type "E" Blumlein lines each switched with an English Electric Valve CX1736X thyratron. This tube is a 11.4 cm diam, 70 kV, two gap, hollow anode device. The hollow anode design was selected because it permits reverse voltage

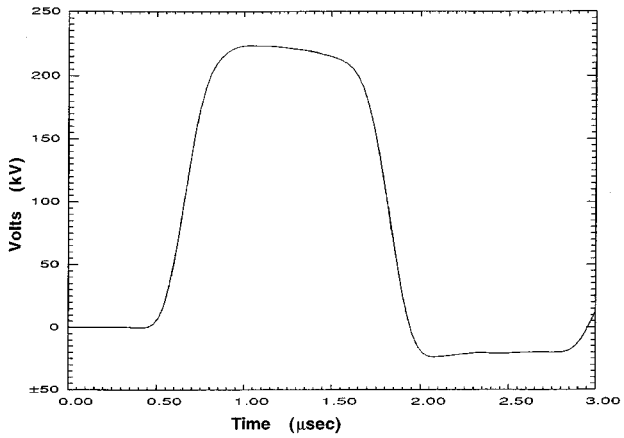

FIG. 5. Accelerating voltage wave form into a 15 Ω resistive load. The circuit has four parallel 7 network Blumlein lines (i.e., 7 networks on each side of the load) with a 4:1 step-up transformer with a coupling coefficient of 0.98.

and current up to 50% of the maximum rating in the event of diode mismatch. We selected Blumlein lines rather than conventional pulse lines because they provide an output pulse voltage into a matched load equal to the charge voltage rather than half the charge voltage. This reduces by two the transformer turns ratio and the number of parallel thyratrons required. The lower turns ratio decreases the transformer leakage inductance enabling pulse rise and fall times to be decreased by a factor of 4. Another benefit of the Blumlein line choice is the end inductors nearest the transformer and thyratrons can be trimmed to offset the transformer leakage and thyratron inductances. The number of networks comprising each Blumlein line will depend on the beam energy spread required by each application. For materials applications, square voltage, and current wave forms are not desired since a spread in ion energy leads to a more uniform deposition profile in targets (this eliminates the Bragg peak near the end of the ion range produced by a monoenergetic beam). For spectroscopic applications, monoenergetic beams are preferred to optimize the charge exchange signal and to simplify the data interpretation. Blumlein lines can be tuned to produce very low ripple square wave forms as shown in Fig. 5 which shows a calculation of the voltage pulse shape for a seven element (on each side of the load) Blumlein line.

The accelerator will be housed in a metal tank ~2 m×2 m×2 m. The overall system length including the vacuum system, but not the neutralizer, is about 3 m. The initial system will use recycled capacitors for the Blumlein lines to minimize development cost. With higher energy-density state-of-the-art capacitors the modulator footprint could be reduced. The modulator tank will be filled with high-voltage transformer oil. An estimate of the electrical efficiency is 30%±10% including power to make the plasma and the pulsed magnetic field. Thus for a 5 GW peak power system, at 30 Hz the time averaged power consumption will be in the neighborhood of 500 kW.

ACKNOWLEDGMENTS

Work sponsored by Los Alamos, Laboratory Directed Research and Development under U.S. DOE Contract W-7405-ENG-36, and this report has been prepared as an account of work assigned to the United States Home Team under Task Agreement No. G 55 TD 09 within the Agreement among the European Atomic Energy Community, the Government of Japan, the Government of the Russian Federation, and the Government of the United States of America on Cooperation in the Engineering Design Activities for the International Thermonuclear Experimental Reactor (ITER EDA Agreement) under the auspices of the International Atomic Energy Agency (IAEA).

[1] R. J. Fonck, D. S. Darrow, and K. P. Jaehnig, Phys. Rev. A **29**, 3288 (1984).
[2] R. J. Fonck and R. A. Hulse, Phys. Rev. Lett. **52**, 530 (1984).
[3] E. J. Synakowski, R. E. Bell, R. V. Budny, C. E. Bush, P. C. Efthimion, B. Grek, D. W. Johnson, L. C. Johnson, B. Leblanc, H. Park, A. T. Ramsey, and G. Taylor, Phys. Rev. Lett. **75**, 3689 (1995).
[4] G. Schilling and E. J. Synakowski, Rev. Sci. Instrum. **63**, 4937 (1992).
[5] E. S. Marmar, in Proceedings of the International School of Plasma Physics ''Piero Caldirola,'' Workshop on Diagnostics for ITER, Varenna, Italy, Aug. 28–Sept. 1, 1991 (unpublished).
[6] E. S. Marmar Rev. Sci. Instrum. (these proceedings).
[7] D. J. Rej, I. Henins, R. J. Fonck, and Y. J. Kim, Rev. Sci. Instrum. **63**, 4934 (1992).
[8] R. R. Bartsch, H. A. Davis, I. Henins, and J. B. Greenly, Rev. Sci. Instrum. **66**, 306 (1995).
[9] W. A. Noonan, S. C. Glidden, J. B. Greenly, and D. A. Hammer, Rev. Sci. Instrum. **66**, 3448 (1995).
[10] D. J. Johnson, R. J. Leeper, W. A. Stygar, R. S. Coats, T. A. Mehlhorn, J. P. Quintenz, S. A. Slutz, and M. A. Sweeney, J. Appl. Phys. **58**, 12 (1985).
[11] V. M. Bystriskii and A. Didenko, *High Power Ion Beams* (American Institute of Physics, New York, 1989).
[12] R. N. Sudan, in *Inertial Confinement Fusion*, edited by A. Caruso and E. Sindoni (International School of Plasma Physics ''Piero Caldirola,'' Varenna, Italian Physical Society, Bologna, 1989), p. 453.
[13] H. A. Davis, G. E. Remnev, R. W. Stinnett, and K. Yatsui, Mater. Res. Soc. Bull. **21**, 58 (1996).
[14] K. Yatsui *et al.*, Phys. Plasmas **1**, 1730 (1994).
[15] G. E. Remnev and V. A. Shulov, Lasers Particle Beams **11**, 707 (1993).
[16] D. J. Rej, R. R. Bartsch, H. A. Davis, R. J. Faehl, J. B. Greenly, and W. J. Waganaar, Rev. Sci. Instrum. **64**, 2753 (1993).
[17] S. Humphries, Jr., R. J. Anderson, J. R. Freeman, and J. Greenly, Rev. Sci. Instrum. **52**, 162 (1981).
[18] J. B. Greenly, M. Ueda, G. D. Rondeau, and D. A. Hammer, J. Appl. Phys. **63**, 1872 (1988).
[19] I. F. Isakov, V. M. Matvienko, M. S. Opekunov, G. E. Remnev, and Y. P. Usov, Vacuum **42**, 159 (1991).
[20] R. N. Sudan and R. V. Lovelace, Phys. Rev. Lett. **31**, 1174 (1973).
[21] M. P. Desjariais, Phys. Fluids B **1**, 1709 (1989).
[22] C. L. Dailey and R. H. Lovberg, AIAA Paper 79-2093, Oct. 1979.
[23] R. H. Lovberg and C. L. Dailey, NASA Contract Rep. No. 191155 (1994).